UNIT A-1A ACC. - LIGHTING & VENTILATION CALCULATIONS					
ROOM NAME	ROOM AREA (SQ. FT)	GLAZING AREA PROVIDED (SQ. FT.) - 2	VENT. AREA (SQ.FT.)	LIGHTING (8% MIN)	VENTILATION (4% MIN.)
GREAT ROOM (WS8)	213.55	69.2	18.23	32.40%	8.54%
BEDROOM (WS7)	104.76	36.68	13.8	35.01%	13.17%
* CURRENT TABLE SHOWS MOST STRINGENT WINDOW OPENING OPTION.					
**VALUES TO BE VERIFIED FROM WINDOW MANUFACTURER'S SPECIFICATION.					

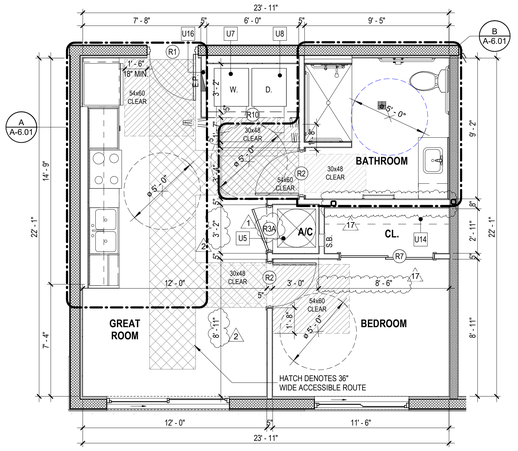

UNIT A-1a ACC. FLOOR PLAN

SCALE: 1/4" = 1'-0"

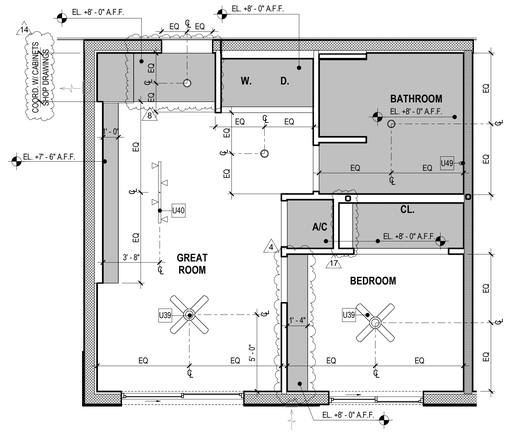

UNIT A-1a ACC. RCP

SCALE: 1/4" = 1'-0"

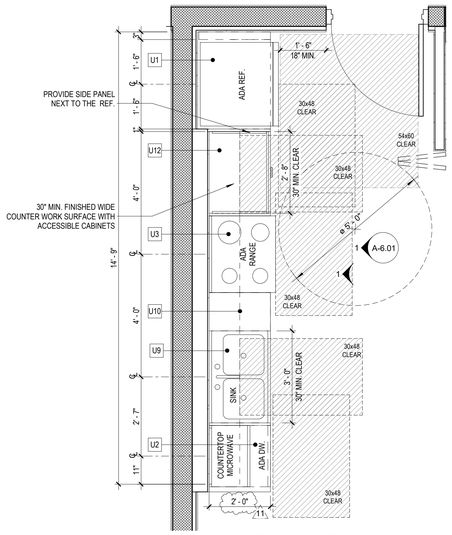

A UNIT A-1a ACC. - KITCHEN

SCALE: 1/2" = 1'-0"

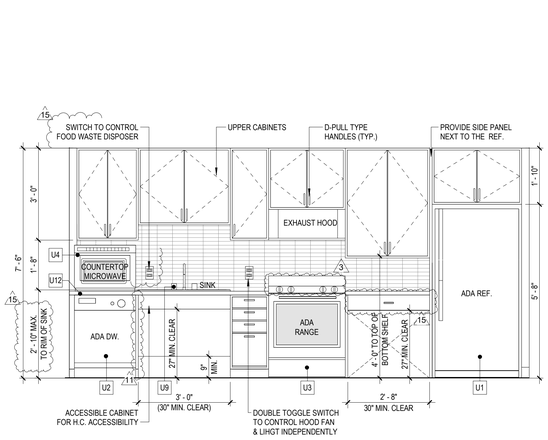

1 UNIT A-1a ACC. KITCHEN ELEV.

SCALE: 1/2" = 1'-0"

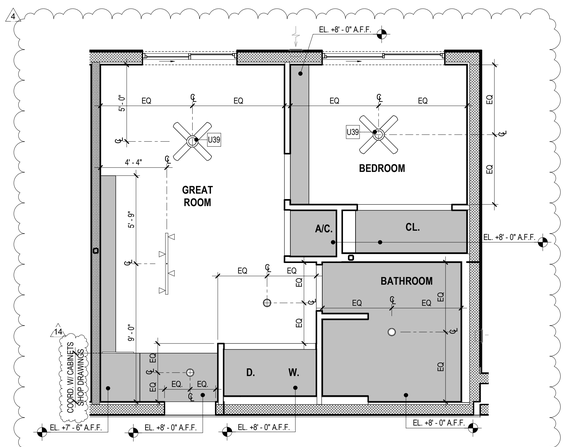

UNIT A-1a ACC. RCP AT BLDG. II

SCALE: 1/4" = 1'-0"

RFI 13

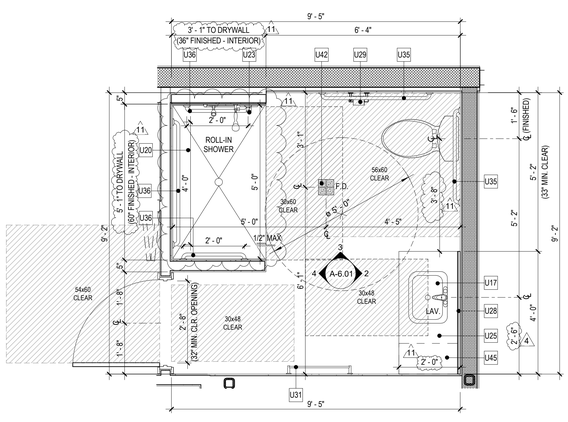

B UNIT A-1a ACC. - BATHROOM

SCALE: 1/2" = 1'-0"

TYPE "B"

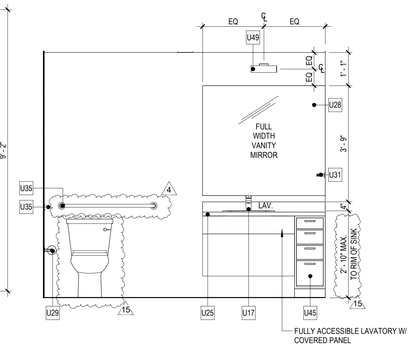

2 UNIT A-1a ACC. M. BATHROOM ELEV.

SCALE: 1/2" = 1'-0"

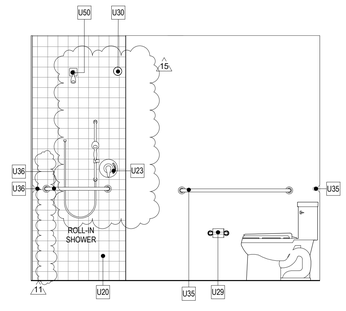

3 UNIT A-1a ACC. M. BATHROOM ELEV.

SCALE: 1/2" = 1'-0"

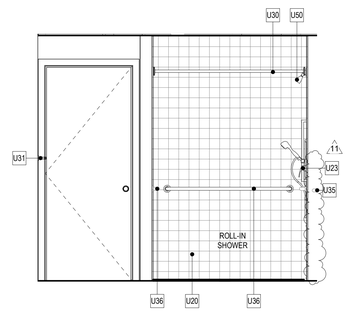

4 UNIT A-1a ACC. M. BATHROOM ELEV.

SCALE: 1/2" = 1'-0"

RFI 13

UNIT PLAN- WALL & SYMBOL LEGEND

- REINF. CMU WALL (REFER TO STRUCT.)
- REINF. CMU WALL (2 HOUR RATED) (REFER TO STRUCT.)
- REINF. SHEAR WALL (2 HR RATED)
- 8" LOW PARAPET WALL @ 42" MIN.
- TYP. METAL STUD PARTITION WALL
- TYP. 1 HOUR TENANT SEPARATION/SMOKE BARRIER METAL STUD PARTITION WALL - REFER TO OVERALL FLOOR PLAN FOR WALL TYPE.
- 2 HOUR UL RATED SHAFT WALL
- (A) WINDOW TYPE. REFER TO WINDOW SCHEDULE
- (2) DENOTES QUANTITY
- (R0) DOOR NUMBER. REFER TO DOOR SCHEDULE
- CENTER LINE
- (WS) WALL TYPE. SEE SHEET A-8.01
- (J) JUNCTION BOX (ELECT.) RECESS IN SLAB ABOVE / SCONCE ON WALL
- E.P. ELECTRICAL PANEL (COORDINATE WITH ELECTRICAL DRAWINGS)
- (WS1) WINDOW SYSTEM. REFER TO WINDOW SCHEDULE.
- WALL REINFORCEMENT REQUIRED FOR FUTURE GRAB BAR INSTALLATION AT ALL GF. UNITS (FHA COMPLIANTS)

UNIT NOTES

1. UNLESS OTHERWISE INDICATED, INTERIOR PARTITIONS, SHOULD BE WALL TYPE: #29 & #31. REFER TO WALL TYPE SCHEDULE SHEET A-8.01. ALL W/D CLOSET REAR WALLS SHALL BE W29, 6" METAL STUD MIN.
2. TYPICAL DIMENSIONS ARE TO FINISHED SURFACES. DIMENSIONS TO STRUCTURAL ELEMENTS ARE TO FACE OF CORE. THICKNESS OF BATHROOM TILE FINISHES ARE NOT INCLUDED IN WALL ASSEMBLY AND THEREFORE NOT INCLUDED IN FINISHED DIMENSIONS.
3. REFER TO OVERALL FLOOR PLAN FOR OVERALL DIMENSION OF UNITS. OVERALL DIMENSION OF UNITS MAY VARY, BUT NO MORE THAN 6". DISCREPANCIES SHALL BE NOTIFIED TO ARCHITECT.
4. FLOOR SHALL MEET AN IIC OF 50 AND STC OF 50.
5. DEMISING WALLS SHALL MEET A STC OF 50.
6. FOR WINDOW TYPE AND LOCATION PLEASE REFER TO OVERALL FLOOR PLANS
7. ALL DOORS INTO ROOMS AND CLOSETS SHALL HAVE A CLEAR PASSAGE WIDTH OF 32" MIN.
8. INSTALLATION OF HIGH SPEED INTERNET SHALL BE PROVIDED.
9. NOTE: SEE SHEET A-6.13 FOR BATHROOM FIXTURE LEGEND
10. FOR UNIT TYPE LIGHTING AND VENTILATION CALCULATIONS, SEE SHEET A-8.00 - A-6.11.
11. PROVIDE LATICRETE HYDRO BAN LOAD BEARING WATERPROOFING MEMBRANE (OR APPROVED EQUAL) UNDER FLOORING /TILES AT ALL SHOWER WALLS AND THROUGHOUT THE ENTIRE BATHROOM FLOOR AREA
12. REFER TO A-8.00B FOR UNIT DOOR SCHEDULE, FINISH SCHEDULE AND FIXTURES SCHEDULE

CEILING NOTES

1. COORDINATE ALL CEILING FIXTURES SHOWN ON REFLECTED CEILING PLAN WITH ELECTRICAL DRAWINGS. ALL FIXTURES IN FIRST FLOOR SLAB SHALL BE ONE HOUR FIRE RATED OR HAVE A FIRE RATED JUNCTION BOX INSTALLED TO MAINTAIN 1 HOUR SLAB RATING. ALL DISCREPANCIES SHALL BE BROUGHT TO THE ARCHITECTS ATTENTION BEFORE PROCEEDING WITH THE WORK.
2. ALL ELEVATIONS SHOWN ON PLAN TO BE ABOVE FINISH FLOOR SLAB (TYP. U.O.N.).
3. FOR FIXTURE TYPE AND SPECIFICATIONS. SEE ELECTRICAL DRAWINGS. SUBMIT ALL SHOP DRAWINGS FOR APPROVAL PRIOR TO PROCUREMENT.
4. FIXTURES SHALL NOT BE SPACED LESS THAN 4'-0" FROM OTHERS FIXTURES & SHALL BE EQUALLY SPACED WITHIN A ROOM OR SPACE, UNLESS OTHERWISE SHOWN -COORDINATE WITH FIRE ALARM DRAWINGS.
5. COORDINATE WITH MECHANICAL AND FIRE PROTECTION DRAWINGS FOR LOCATION OF DUCT, DIFFUSER & SPRINKLER.
6. ALL FIXTURES SHALL BE NEW & INSTALLED AS PER MANUFACTURER'S RECOMMENDATION.
7. MINIMUM OF 7'-10" SHALL BE THE TYP. CEILING HEIGHT-UNLESS OTHERWISE NOTED.
8. ALL AUDIO/VISUAL EMERGENCY EQUIPMENT SHALL BE AS PER OWNER'S REQUIREMENTS AND GUIDELINES. CONTRACTOR SHALL REFER TO ELECTRICAL DRAWINGS AND CONSULT OWNER DURING AND AFTER BID PROCESS.
9. VERIFY ALL SOFFIT SIZE AS REQ'D FOR RUNNING DUCTS.
10. ALLOWANCE FOR ADDITIONAL SOFFITS SHALL BE PROVIDED FOR FIELD CONTINGENCY CONDITIONS.

CEILING LEGEND

- GYPSUM BOARD
- (J) JUNCTION BOX
- URFACE MOUNT LIGHT FIXTURE
- CEILING FAN - B.O. FAN SHALL BE 7' MIN. CLR. A.F.F.
- 6" RECESSED HI-HAT LIGHT FIXTURE
- WALL MOUNTED LIGHT FIXTURE

NOTES:

WINDOW TREATMENT:
PROVIDE WINDOW TREATMENT BY HUNTER DOUGLAS OR APPROVED EQUAL. WINDOW TREATMENTS SHALL COMPLY WITH WCMA A 100.1 AND NFPA 701. PRODUCT SHALL BE MANUFACTURED FREE OF TOXIC OR HAZARDOUS MATERIALS. OPERABLE PARTS SHALL COMPLY WITH ADA REQUIREMENTS AND BE INSTALLED AT 48" MAX. AFF.

DIMENSIONS:
A. DIMENSIONS ARE TO FINISHD SURFACES UNLESS OTHERWISE NOTED.
B. THICKNESS OF TILE NOT INCLUDED IN WALL ASSEMBLY AND THEREFORE NOT INCLUDED IN FINISHED DIMENSIONS.

UNIT KEYNOTE LEGEND

U1 ENERGY STAR REFRIGERATOR (PROVIDE CONNECTION FOR ICE MAKER).

U2 24" WIDE DISHWASHER (ENERGY STAR)/ ADA COMPLIANT @ ACCESSIBLE UNITS.

U3 FULL SIZE RANGE WITH OVEN AND MICROWAVE ABOVE/ FULLY ACC. RANGE WITH HOOD FAN ABOVE AT FULLY ACCESSIBLE UNITS.

U4 COUNTER TOP MICROWAVE ONLY @ ACCESSIBLE UNITS.

U5 ENERGY STAR ELECTRIC WATER HEATER / A.H.U. PROVIDE MIN. 4" CLEARANCE AROUND A.H.U PER FBC 2020 (MECH).

U6 FULL SIZE STACKABLE WASHER/DRYER (ENERGY STAR QUALIFIED) TYP. CONNECTIONS AS PER ELECTRICAL & PLUMBING.

U7 FULL SIZE FRONT LOADING WASHER (ENERGY STAR). CONNECTIONS AS PER ELECTRICAL & PLUMBING.

U8 FULL SIZE FRONT LOADING DRYER (ENERGY STAR). CONNECTIONS AS PER ELECTRICAL & PLUMBING.

U9 UNDER MOUNTED DOUBLE KITCHEN SINK W/ GARBAGE DISPOSAL (9" DEEP MIN./6.5" DEEP MAX @ FULLY ACCESSIBLE UNITS).

U10 LINE OF CABINETS ABOVE.

U11 LINEN CABINET W/ DEPTH TO MATCH INSTALLED VANITY DEPTH.

U12 36" HIGH GRANITE COUNTER/ 34" MAX HIGH COUNTER AT FULLY ACCESSIBLE UNITS. 24" MAX. DEEP COUNTERTOP AT FULLY ACCESSIBLE UNITS.

U13 15" WIDTH x 24" DEPTH PANTRY WITH FALSE BACK AT 24" DEPTH.

U14 12" DEEP VINYL COATED ADJUSTABLE WIRE SHELF W/ HANGER ROD.

U15 15" DEEP VINYL COATED WIRE SHELF MOUNTED AT 54" A.F.F. AT LEAST ONE AT 54" A.F.F. ALL LINENS HAVE (5) SHELVES.

U16 ELECTRICAL PANEL. REFER TO A-6.12 FOR INSTALLATION GUIDELINES, ALSO REFER TO ELECTRICAL PLANS FOR DETAILS.

U17 UNDERMOUNT LAVATORY. 6" DEEP MIN. REFER TO A-6.13, #4, BATHROOM FIXTURE LEGEND.

U18 FULLY ACCESSIBLE LAVATORY W/ ENCLOUSURE. REFER TO A-6.13, #5 & #6A, ADA BATHROOM FIXTURE LEGEND.

U19 TOILET. REFER TO A-6.13, #1, BATHROOM FIXTURE LEGEND.

U20 ROLL-IN SHOWER STALL SHALL HAVE AN IMPERVIOUS FINISH UP TO CEILING ABOVE DRAIN PER FBC 2020 REFER TO A-6.13, #14 BATHROOM FIXTURE LEGEND, ADA BATHROOM FIXTURE LEGEND #14,#15,#17,#18,#19.

U21 SHOWER STALL SHALL HAVE AN IMPERVIOUS FINISH UP TO CEILING ABOVE DRAIN PER FBC 2020. REFER TO A-6.13, #14, BATHROOM FIXTURE LEGEND.

U22 SLIP-RESISTANT TUB SHALL HAVE AN IMPERVIOUS FINISH UP TO CEILING ABOVE DRAIN PER FBC 2020. FINISHED DIMENSION AS PER TUB MANUFACTURER. REFER TO A-6.13, #11, BATHROOM FIXTURE LEGEND.

U23 CONTROL AREA. REFER TO A-6.13, #12, BATHROOM FIXTURE LEGEND. DUAL CONTROL VALVE TO SELECT HANDLE OR FIXED SHOWER HEAD AT FULLY ACCESSIBLE UNITS.

U24 WALL MOUNTED SHOWER HEAD. PROVIDE HANDLE WITH ADJUSTABLE BAR FOR ALL ROLL IN SHOWER AND FULLY ACCESSIBLE UNITS. REFER TO A-6.13, #7, FHA/ADA BATHROOM FIXTURE LEGEND.

U25 34" HIGH GRANITE COUNTER. PROVIDE 4" HIGH BACKSPLASH TO MATCH COUNTERTOP MATERIAL ONLY AT BATHROOM VANITY COUNTERS.

U26 HIDDEN LINES DENOTES FUTURE RETRACTABLE GRAB BAR INSTALLATION. REFER TO A/6.11, DTL #1.

U27 VANITY CABINET. REFER TO A-6.13, #5 AT BATHROOM FIXTURE LEGEND/ FULLY ACC. REFER TO A-6.13 #6 & #6A ADA BATHROOM FIXTURE LEGEND.

U28 MIRROR TO MATCH WIDTH OF VANITY. HEIGHT TO BE COORDINATED WITH LIGHT FIXTURE. REFER TO A/6.13, #7,FHA/ADA BATHROOM FIXTURE LEGEND.

U29 TOILET PAPER HOLDER. REFER TO A-6.13 #8 FHA/ADA BATHROOM FIXTURE LEGEND.

U30 CURTAIN ROD. REFER TO FHA BATHROOM FIXTURE LEGEND A-6.11 DTL #13.

U31 TOWEL BAR. REFER TO FHA/ADA BATHROOM FIXTURE LEGEND A-6.11 DTL #9.

U32 HIDDEN LINE DENOTES FUTURE GRAB BAR INSTALLATION AT TOILET. WALL REINFORCEMENT IS REQUIRED. REFER TO FHA BATHROOM FIXTURE LEGEND A-6.11 DTL #2, #3.

U33 HIDDEN LINE DENOTES FUTURE GRAB BAR INSTALLATION AT TUB. WALL REINFORCEMENT IS REQUIRED. REFER TO FHA BATHROOM FIXTURE LEGEND A-6.11 DTL #3A, #3B, 3C.

U34 HIDDEN LINE DENOTES FUTURE GRAB BAR INSTALLATION AT SHOWER. WALL REINFORCEMENT IS REQUIRED. REFER TO FHA BATHROOM FIXTURE LEGEND A-6.11, DTL #12, #12A.

U35 GRAB BAR IN PLACE FOR ALL FULLY ACCESSIBLE UNITS AT TOILET, WALL REINFORCEMENT IS REQUIRED. REFER TO A-6.13, #2, #3, ADA BATHROOM FIXTURE LEGEND.

U36 GRAB BAR IN PLACE FOR ALL FULLY ACCESSIBLE UNITS AT ROLL-IN SHOWERS/ CURB SHOWER. WALL REINFORCEMENT IS REQUIRED. REFER TO A-6.13, #12A, #16, ADA BATHROOM FIXTURE LEGEND.

U37 GRAB BAR IN PLACE FOR ALL FULLY ACCESSIBLE UNITS AT TRANSFER SHOWERS/ TUBS. WALL REINFORCEMENT IS REQUIRED. REFER TO A-6.13, #20, #21, ADA BATHROOM FIXTURE LEGEND.

U38 LIGHT FIXTURE SCONCE. CENTER OVER COUNTERTOP.

U39 CEILING FAN WITH LIGHT KIT ENERGY STAR- PROVIDE WALL CONTROL SWITCH. REFER TO ELECTRICAL DRAWINGS FOR DETAILS. BOTTOM OF FAN SHALL BE 7'-0" MIN. AFF.

U40 TRACK LIGHT FIXTURE. REFER TO ELECTRICAL PLANS.

U41 OUTSIDE AIR INTAKE TO AC CLOSET. COORDINATE WITH MECHANICAL DRAWINGS.

U42 FLOOR AREA DRAIN FOR ROLL-IN SHOWERS. REFER TO PLUMBING.

U43 N/A.

U44 BACKSPLASH STARTING AT COUNTERTOP AND ENDING AT BOTTOM OF UPPER CABINETS.

U45 ROLL OUT DRAWER/SHELF W/ D-PULL TYPE HANDLES.

U46 VERTICAL PANEL FROM FLOOR TO TOP OF OVERHEAD CABINET, FINISHED WITH PLASTIC LAMINATE ON VISIBLE SIDES.

U47 COORDINATE TOILET AND DRYER EXHAUST WITH MECHANICAL DRAWINGS.

U48 30" WIDE CLEAR COUNTER WORK SPACE.

U49 CENTER LIGHT OVER VANITY.

U50 WALL MOUNTED SHOWER HEAD. WATER SENSE 2.0 GALLONS/MINUTE. REFER TO A/6.18, BATHROOM FIXTURE LEGEND.

ATLANTIC PACIFIC COMMUNITY BUILDERS
Heritage Village South Bulletin 2
DATE RECEIVED
05/15/2025

CORWIL ARCHITECTS
4210 LAGUNA ST. CORAL GABLES FL, 33146
QUALIFIER LIC. NO. AR0016003 T:305.448.7383

PROJECT:
HERITAGE VILLAGE
26905 SW 142nd Ave

OWNER:
ATLANTIC PACIFIC COMMUNITIES
161 NW 6 St Ste 1020, Miami, FL 33136

UNIT A-1a ACC. FLOOR PLANS & DETAILS

PHASE:
PERMIT SET

PERMIT No.:

REVISIONS		
No.	Revision Description	Date
1	Bldg. Dept. Com.	01/25/24
2	COORDINATION	02/27/24
3	Bldg. Dept. Com.	04/05/24
4	COORDINATION	04/26/24
5	Bldg. Dept. Com.	04/26/24
8	COORDINATION	06/25/24
11	Bldg. Dept. Com.	08/13/24
14	COORDINATION	11/22/24
15	ADA/FHA Revision	01/07/25
17	COORDINATION	04/21/25

SEAL:

THESE DRAWINGS ARE THE PROPERTY OF CORWIL ARCHITECTS INC. UNLESS OTHERWISE PROVIDED FOR BY CONTRACT, THE CONTENTS OF THESE DRAWINGS ARE CONFIDENTIAL AND SHALL NOT BE TRANSMITTED TO ANY OTHER PARTY EXCEPT AS AGREED TO BY THE ARCHITECT / ENGINEERS.

DATE: 12-21-2023
JOB No.: 2023-19
DRAWN BY: YJ, MA, TA, IS
APPR BY: AMC
PRINTED: 5/16/2025 10:59:39 AM

SHEET NUMBER:
A-6.01